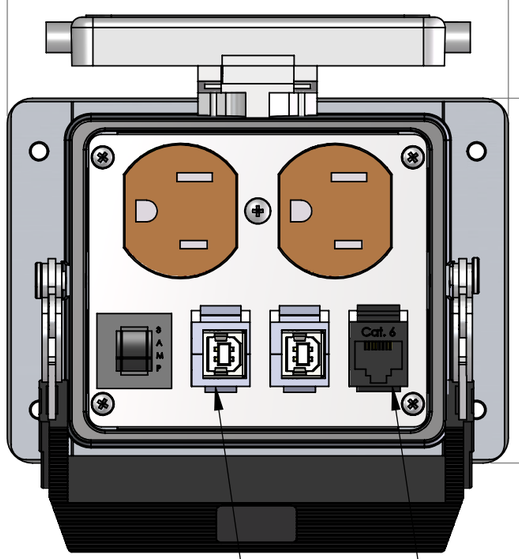

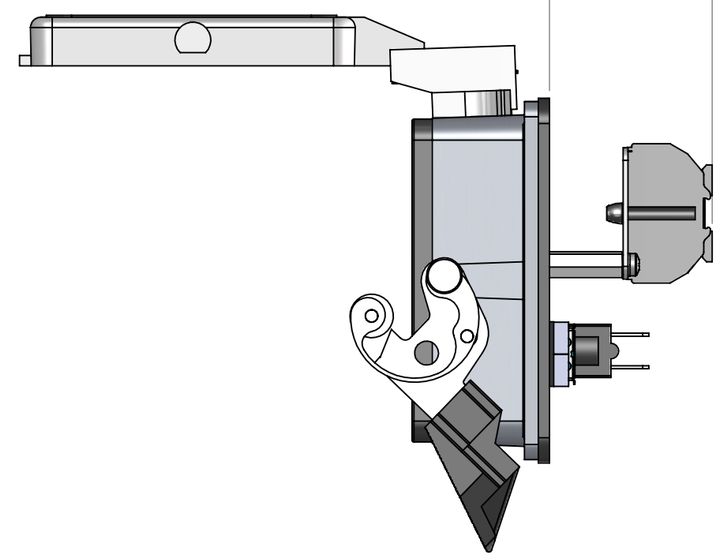

USB CONNECTORS
TYPE B FEMALE EXT/
TYPE A FEMALE INT
(2X)

RJ45 CONFIGURED
CAT 6 JACK /CAT 6 JACK

PANEL CUTOUT

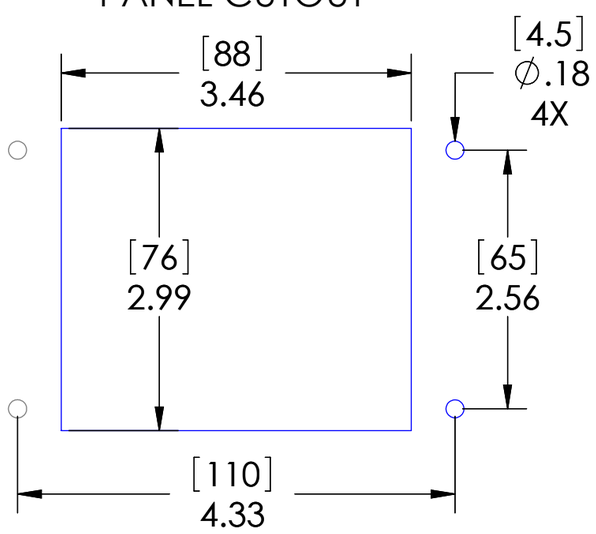

These devices shall be mounted on enclosures having adequate strength and thickness and with adequate spacing provided. Seal rating is based on mounting to a surface that is clean, flat and smooth.

PIC RATINGS/SPECIFICATIONS	
VOLTS:	125V
AMPS:	3A
SCCR:	0.2kA
NEMA/UL | EN 60529:	4, 4X, 12 | IP65
MOUNTING SCREW SIZE:	M4 (8-32) (304 or 316SS for 4X)
MOUNTING SCREW TORQUE:	1.2~1.8N-m (0.9~1.3 Lb-Ft)
INCOMING POWER WIRE SIZE:	0.5 ~ 4.0 sq mm / 20-12AWG
WIRE STRIP LENGTH:	10 ~ 11 mm

HOUSING MATERIALS	
BODY:	EPOXY COATED DIE CAST ALUMINUM
GASKET:	THERMOPLASTIC ELASTOMER
HANDLE:	POLYAMIDE
LEVERS:	STAINLESS STEEL

MOUNTING KIT ORDERED
SEPARATELY CONTAINS
M4x0.7 SS SCREW, NYLON WASHER,
SPLIT LOCKWASHER AND M4 NUT
P/N: D-PIC-MT

c UL us LISTED ENCL. ACC. 5JR2

UNLESS OTHERWISE SPECIFIED:
DIMENSIONS ARE IN INCHES AND [MM]

MATERIAL

FINISH

DO NOT SCALE DRAWING

DRAWN BY	DG
DRAWN DATE	10/05/2018
CHECKED BY	JJH
CHECK DATE	10/05/2018

COMMENTS:

MENCOM CORPORATION

TITLE:

DPLX; RJ45; 2USB-BA; 3A; 32

SIZE	DWG. NO.	REV
B	DP-RJ45-2USB-BFAF-R-32	D

SCALE: 2:3 | WEIGHT: | SHEET 1 OF 1

PROPRIETARY AND CONFIDENTIAL
THE INFORMATION CONTAINED IN THIS DRAWING IS THE SOLE PROPERTY OF MENCOM CORPORATION. ANY REPRODUCTION IN PART OR AS A WHOLE WITHOUT THE WRITTEN PERMISSION OF MENCOM CORPORATION IS PROHIBITED.