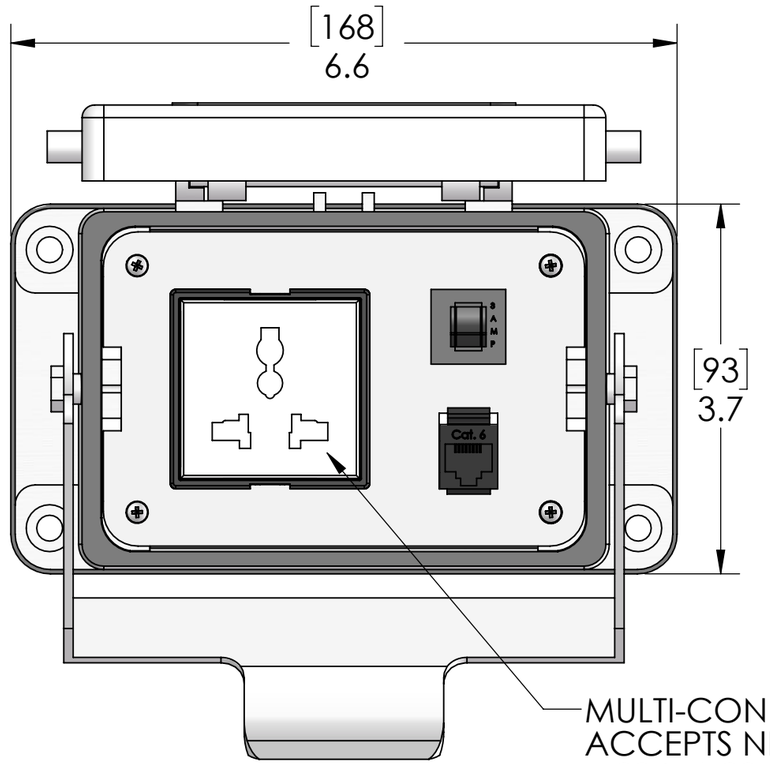

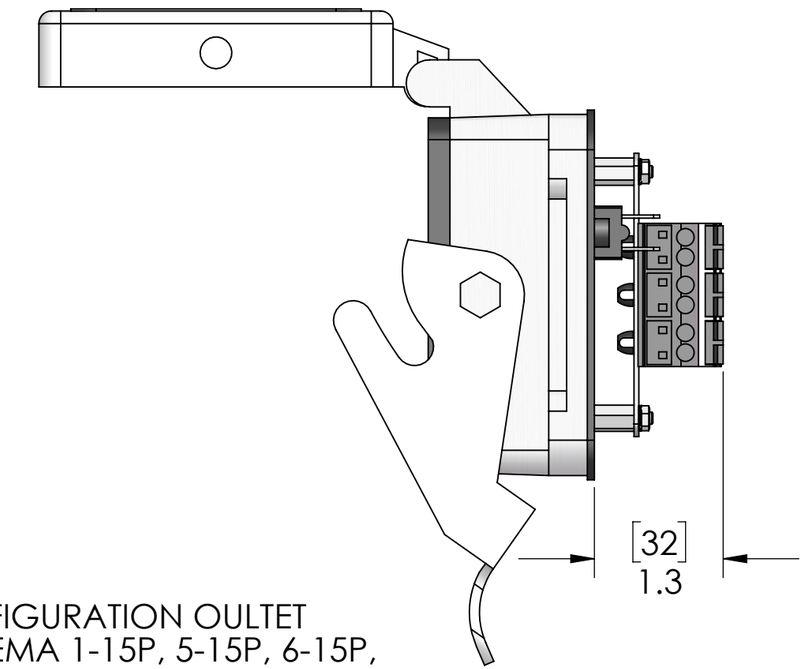

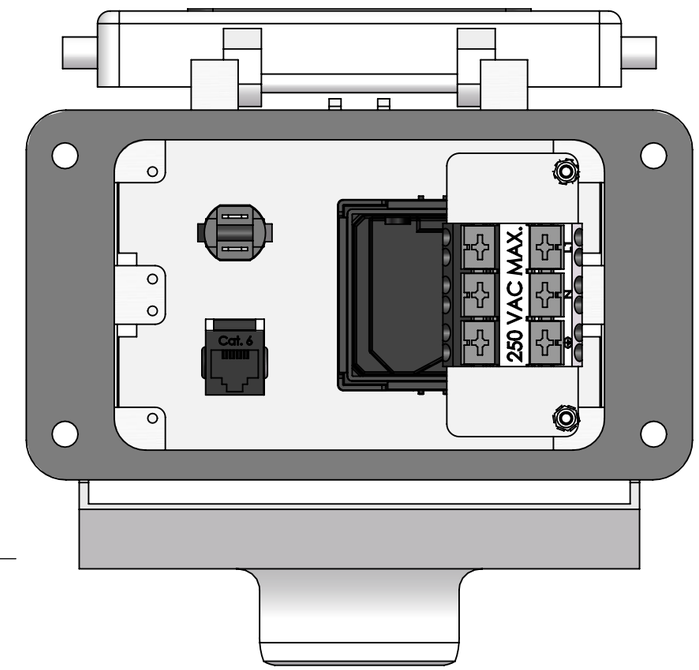

MULTI-CONFIGURATION OULTET
ACCEPTS NEMA 1-15P, 5-15P, 6-15P,
5-20P, 6-20P, & UK1-13P, UK3-5P, JA1-15P,
EU1-16P (NON-GROUNDING), AU1-10P,
AU2-15P, CH1-10P, EUROPLUG AND
AR1-10P TYPE PLUGS

PANEL CUTOUT

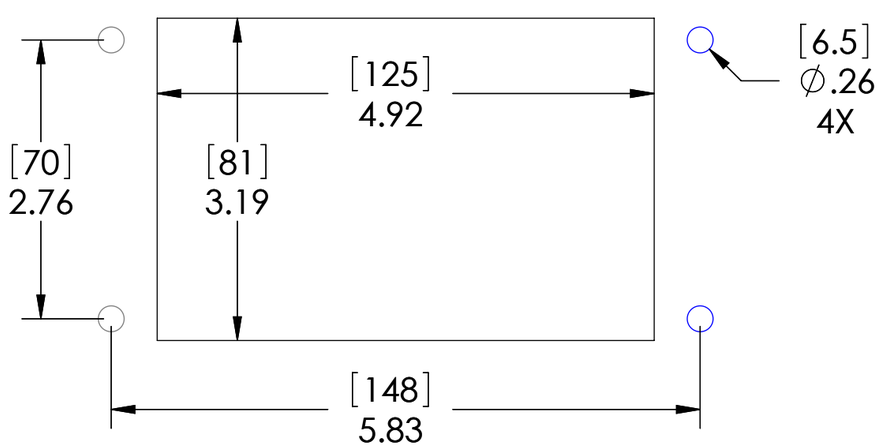

These devices shall be mounted on enclosures having adequate strength and thickness and with adequate spacing provided. Seal rating is based on mounting to a surface that is clean, flat and smooth.

PIC RATINGS/SPECIFICATIONS	
VOLTS:	250V
AMPS:	3A
NEMA/UL | EN 60529:	4, 4X, 12 | IP65
MOUNTING SCREW SIZE:	M6 (1/4-20) (304 or 316SS for 4X)
MOUNTING SCREW TORQUE:	3.0~3.6N-m (2.2~2.7 Lb-Ft)
INCOMING POWER WIRE SIZE:	0.5 ~ 4.0 sq mm / 20-12AWG
WIRE STRIP LENGTH:	10 ~ 11 mm

HOUSING MATERIALS	
BODY:	EPOXY COATED DIE CAST ALUMINUM
GASKET:	THERMOPLASTIC ELASTOMER
HANDLE:	STAINLESS STEEL

MOUNTING KIT ORDERED
SEPARATELY CONTAINS
M6x1 SS SCREW, NYLON WASHER,
SPLIT LOCKWASHER AND M6 NUT
P/N: D-PIC48-MT

STANDARD CONFIGURATIONS UNLESS OTHERWISE NOTED		
CONN. TYPE	EXTERIOR	INTERIOR
RJ45	CAT 6 JACK	CAT 6 JACK

PROPRIETARY AND CONFIDENTIAL
THE INFORMATION CONTAINED IN THIS DRAWING IS THE SOLE PROPERTY OF MENCOM CORPORATION. ANY REPRODUCTION IN PART OR AS A WHOLE WITHOUT THE WRITTEN PERMISSION OF MENCOM CORPORATION IS PROHIBITED.

UNLESS OTHERWISE SPECIFIED:
DIMENSIONS ARE IN INCHES AND [MM]

MATERIAL
FINISH
DO NOT SCALE DRAWING

DRAWN BY	DCG
DRAWN DATE	10/31/2019
CHECKED BY	DCG
CHECK DATE	10/31/2019

COMMENTS:

MENCOM CORPORATION

TITLE:
UNIV INT RCPT; RJ45; 3A; SZ48

SIZE	DWG. NO.	REV
B	DUN-RJ45-R-48	F
SCALE: 2:3	WEIGHT:	SHEET 1 OF 1