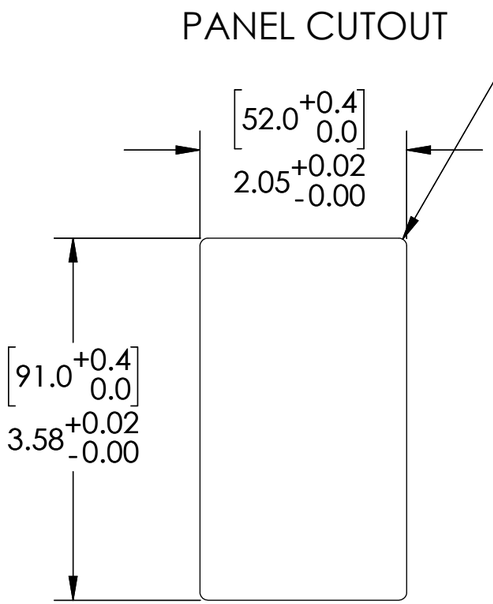

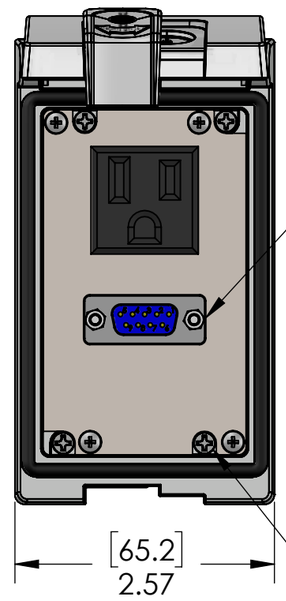

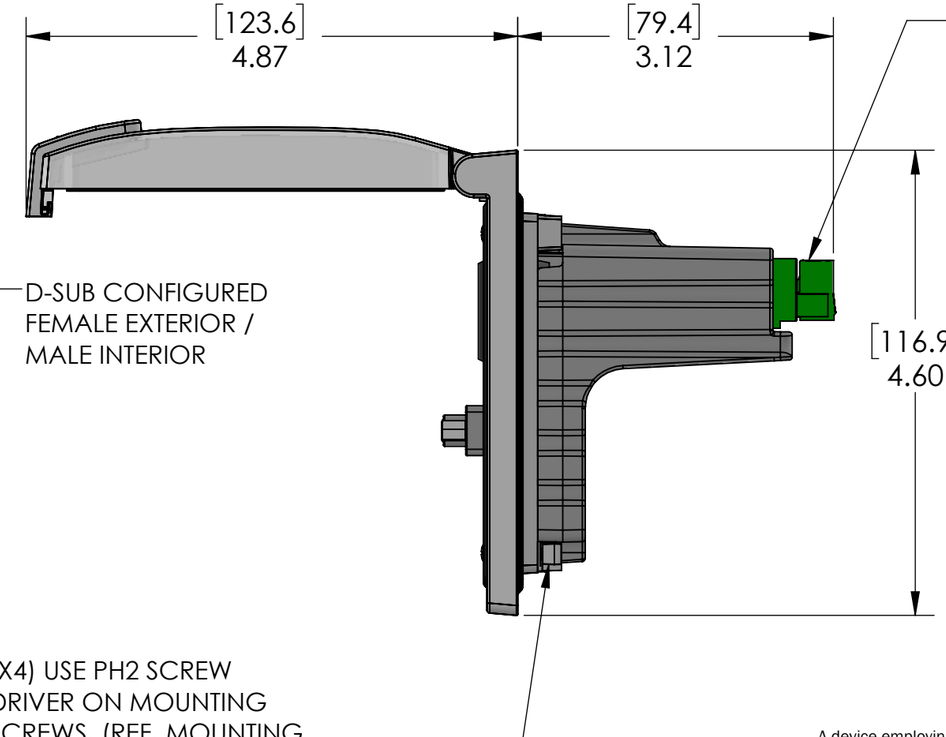

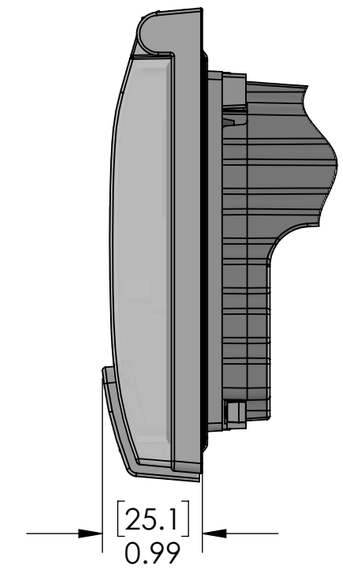

(X4) USE PH2 SCREW DRIVER ON MOUNTING SCREWS. (REF. MOUNTING SCREW TORQUE)

ROTATE TWO TURNS COUNTER CLOCKWISE TO RELEASE THE TURN BUCKLE PRIOR TO TIGHTENING

TURN BUCKLES ROTATE 90 DEG. INTO THEIR CLAMPING POSITION AS MOUNTING SCREWS TIGHTEN. DO NOT OVER-TORQUE!

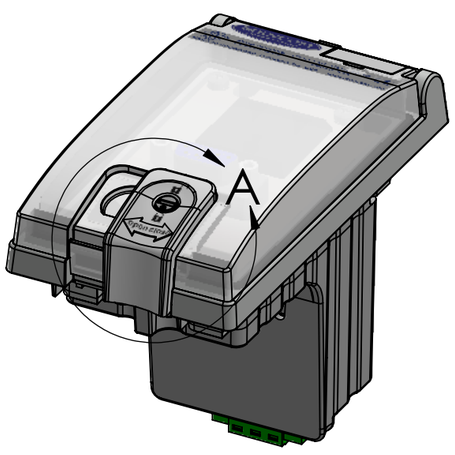

SLIDE LATCH TO OPEN/CLOSE
ROTATE LOCK TO LOCK CLOSED

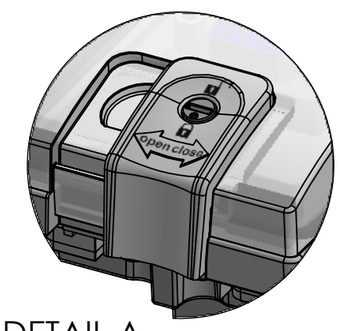

DETAIL A
SCALE 1 : 1

A device employing a 15 A or 20 A grounding type receptacle but no supplementary protector shall be protected by a fuse or circuit breaker that does not exceed the marked rating of the receptacle in the end use. When a fuse or circuit breaker rated less than the receptacle's rating is provided, a Marking shall be provided to indicate the maximum ampere rating of the protection provided.

These devices shall be mounted on enclosures having adequate strength and thickness and with adequate spacing provided. Seal rating is based on mounting to a surface that is clean, flat and smooth.

PIC RATINGS/SPECIFICATIONS	
VOLTS:	125V
AMPS:	15A
SCCR:	10kA
NEMA/UL | EN 60529:	4, 12 | IP65
PANEL THICKNESS:	5.0mm max
MOUNTING SCREW TORQUE:	0.8N-m
TERMINAL BLOCK TORQUE:	0.5N-m
INCOMING POWER WIRE SIZE:	0.25 - 2.5 sq mm / 24-12AWG
WIRE STRIP LENGTH:	7 - 8 mm

c UL us LISTED ENCL. ACC. 5JR2

OPERATING TEMPERATURE:	(-10°C / +75° C (+14° F / +167° F))

HOUSING MATERIALS	
BODY:	NICKEL PLATED ZINC
GASKETS:	PUR FIPG
FRONT COVER:	POLYCARBONATE
LATCH & LOCK:	PBT
BACK COVER:	POLYPROPYLENE

UNLESS OTHERWISE SPECIFIED:

DIMENSIONS ARE IN INCHES AND [MM]

MATERIAL

FINISH

DO NOT SCALE DRAWING

DRAWN BY	DG
DRAWN DATE	12/23/2019
CHECKED BY	DCG
CHECK DATE	02/17/2020

COMMENTS:

PROPRIETARY AND CONFIDENTIAL

THE INFORMATION CONTAINED IN THIS DRAWING IS THE SOLE PROPERTY OF MENCOM CORPORATION. ANY REPRODUCTION IN PART OR AS A WHOLE WITHOUT THE WRITTEN PERMISSION OF MENCOM CORPORATION IS PROHIBITED.

MENCOM CORPORATION

TITLE:

SMPLX; DB9; LP1

SIZE	DWG. NO.	REV
B	LP1-DP1-DB9	B

SCALE: 2:3 | WEIGHT: | SHEET 1 OF 1