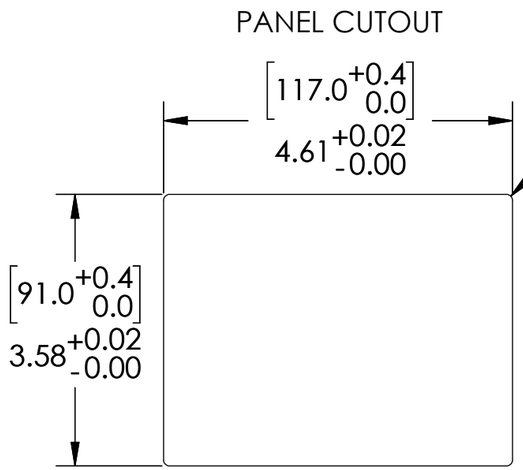

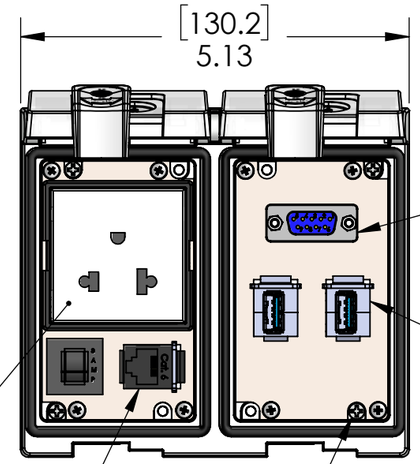

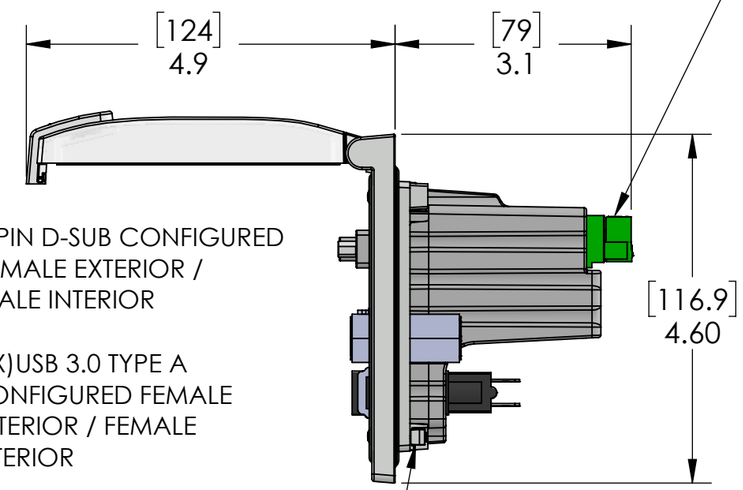

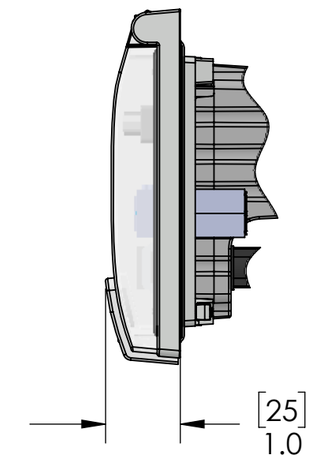

(X4) USE PH2 SCREW DRIVER ON MOUNTING SCREWS. (REF. MOUNTING SCREW TORQUE)

ROTATE TWO TURNS COUNTER CLOCKWISE TO RELEASE THE TURN BUCKLE PRIOR TO TIGHTENING

TURN BUCKLES ROTATE 90 DEG. INTO THEIR CLAMPING POSITION AS MOUNTING SCREWS TIGHTEN. DO NOT OVER-TORQUE!

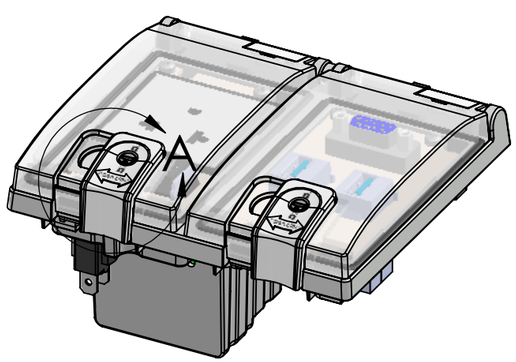

SLIDE LATCH TO OPEN/CLOSE
ROTATE LOCK TO LOCK CLOSED

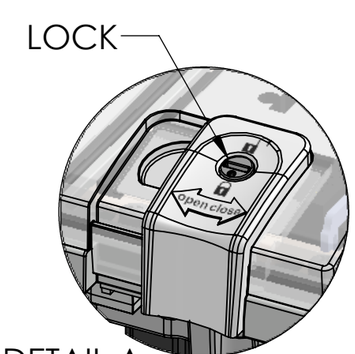

DETAIL A
SCALE 1 : 1

These devices shall be mounted on enclosures having adequate strength and thickness and with adequate spacing provided. Seal rating is based on mounting to a surface that is clean, flat and smooth.

PIC RATINGS/SPECIFICATIONS	
VOLTS:	250V
AMPS:	3A
SCCR:	0.2kA
NEMA/UL | EN 60529:	4, 12 | IP65
PANEL THICKNESS:	5.0mm max
MOUNTING SCREW TORQUE:	0.8N-m
TERMINAL BLOCK TORQUE:	0.5N-m
INCOMING POWER WIRE SIZE:	0.25 - 2.5 sq mm / 24-12AWG
WIRE STRIP LENGTH:	7 - 8 mm

OPERATING TEMPERATURE:	(-5°C / +50° C (+23° F / +104° F))
HOUSING MATERIALS	
BODY:	NICKEL PLATED ZINC
GASKETS:	PUR FIPG
FRONT COVER:	POLYCARBONATE
LATCH & LOCK:	PBT
BACK COVER:	POLYPROPYLENE

UNLESS OTHERWISE SPECIFIED:
DIMENSIONS ARE IN INCHES AND [MM]

MATERIAL

FINISH

DO NOT SCALE DRAWING

DRAWN BY	DG
DRAWN DATE	06/26/2024
CHECKED BY	BEM
CHECK DATE	12/29/2016

COMMENTS:

PROPRIETARY AND CONFIDENTIAL
THE INFORMATION CONTAINED IN THIS DRAWING IS THE SOLE PROPERTY OF MENCOM CORPORATION. ANY REPRODUCTION IN PART OR AS A WHOLE WITHOUT THE WRITTEN PERMISSION OF MENCOM CORPORATION IS PROHIBITED.

MENCOM CORPORATION

TITLE:

BR RCPT;DB9;RJ45;2USB-AA;R;LP2

SIZE	DWG. NO.	REV
B	LP2-DBR-DB9-RJ45-2USB-AFAF-R	A
SCALE: 1:2	WEIGHT:	SHEET 1 OF 1